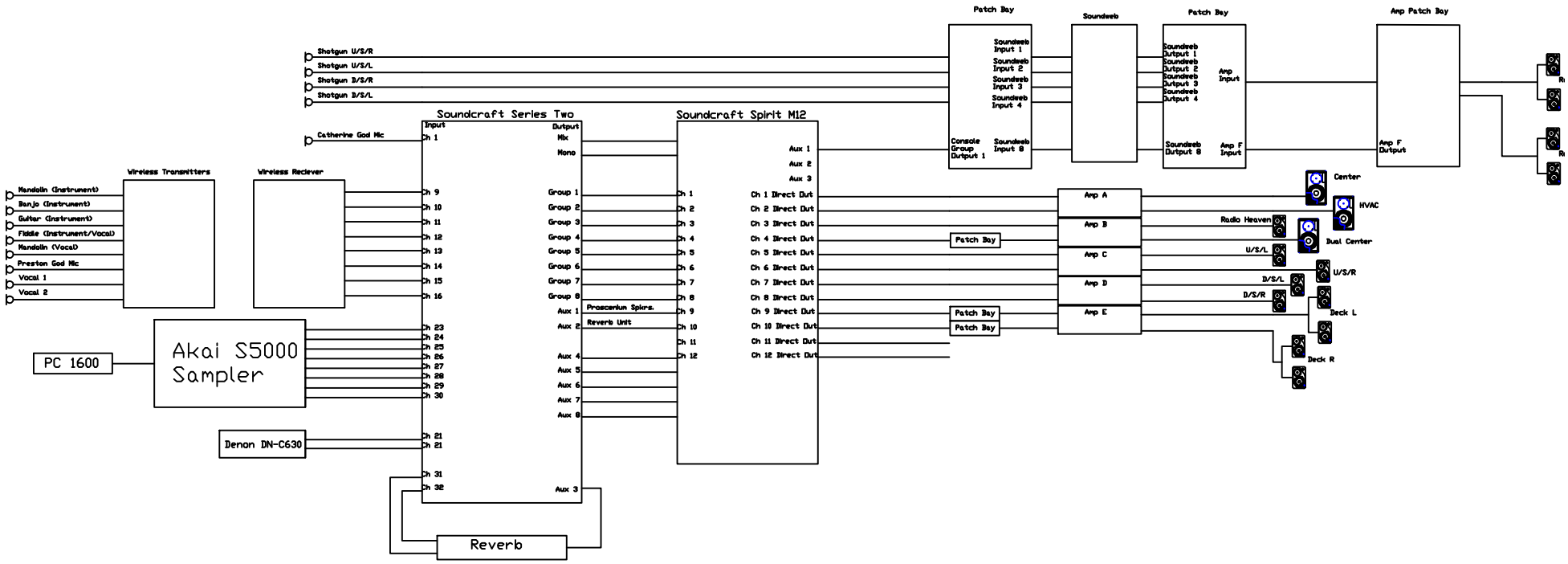
Shotgun U/S/R
Shotgun U/S/L
Shotgun D/S/R
Shotgun D/S/L
Catherine God Mic
Wireless Transmitters
Wireless Reciever
Mandolin (Instrument)
Banjo (Instrument)
Guitar (Instrument)
Fiddle (Instrument/Vocal)
Mandolin (Vocal)
Preston God Mic
Vocal 1
Vocal 2
PC 1600
Akai S5000 Sampler
Denon DN-C630
Soundcraft Series Two
Input
Output
Ch 1
Ch 9
Ch 10
Ch 11
Ch 12
Ch 13
Ch 14
Ch 15
Ch 16
Ch 23
Ch 24
Ch 25
Ch 26
Ch 27
Ch 28
Ch 29
Ch 30
Ch 21
Ch 21
Ch 31
Ch 32
Mix
Mono
Group 1
Group 2
Group 3
Group 4
Group 5
Group 6
Group 7
Group 8
Aux 1
Aux 2
Aux 4
Aux 5
Aux 6
Aux 7
Aux 8
Aux 3
Proscenium Spkrs.
Reverb Unit
Reverb
Soundcraft Spirit M12
Aux 1
Aux 2
Aux 3
Ch 1 Direct Out
Ch 2 Direct Out
Ch 3 Direct Out
Ch 4 Direct Out
Ch 5 Direct Out
Ch 6 Direct Out
Ch 7 Direct Out
Ch 8 Direct Out
Ch 9 Direct Out
Ch 10 Direct Out
Ch 11 Direct Out
Ch 12 Direct Out
Patch Bay
Patch Bay
Patch Bay
Patch Bay
Soundweb
Soundweb Input 1
Soundweb Input 2
Soundweb Input 3
Soundweb Input 4
Console Group Output 1
Soundweb Input 8
Soundweb Output 1
Soundweb Output 2
Soundweb Output 3
Soundweb Output 4
Soundweb Output 8
Amp Input
Amp F Input
Amp Patch Bay
Amp F Output
Amp A
Amp B
Amp C
Amp D
Amp E
Center
HVAC
Radio Heaven
Dual Center
U/S/L
U/S/R
D/S/L
D/S/R
Deck L
Deck R